L G M PRODUCTS

BExDS120D

Alarm sounder

HAZARDOUS

AUDIO VISUAL

- Sound Output: 121dB(A)
- 32 Tone, 3 Stages
- IP Rating: 66 & 67
- Available Voltages: 12Vdc 24Vdc 48Vdc
  115Vac 230Vac
- Automatic synchronisation on multi-sounder system
- Very large termination area
- Ratchet adjustable stainless steel ‘U’ bracket
- Programmable version available
  - 45 tones,4 remotely selectable stages

© 2012 LGM Products Ltd. (v11.4)
LGM Products Ltd, Unit 15 Riverside Industrial Park, Farnham, Surrey, GU9 7UG, United Kingdom.
Tel: +44(0)1252 725257 Fax: +44(0)1252 727627 Email: sales@Lgmproducts.com Web: www.Lgmproducts.com

L G M PRODUCTS

BExDS120D
Alarm sounder

HAZARDOUS

AUDIO VISUAL

Max. sound output	121dB(A)
Nominal sound output	117dB(A)
IP rating	66/67
Alarm tones	32
Alarm stages	3
Stage Switching	Negative or positive
Volume control	9dB
Cable entry	2 x M20 ISO (one stopping plug included)
Terminal capacity	0.5 to 4.0mm² cables
Line monitoring	Min 500 ohm 2w or 3k3 Ohm 0.5w resistor or diode within Exd enclosure (dc versions only)
Operating temp.	Refer to approval table
Body material	Marine grade copper free LM6 aluminium
Body Finish	Phosphated & powered coated paint, anti-corrosion
Flare material	Black colour, high impactUL94 VO & 5VA flame retardant ABS
Unit weight	3.0Kg (DC) 3.2Kg (AC)

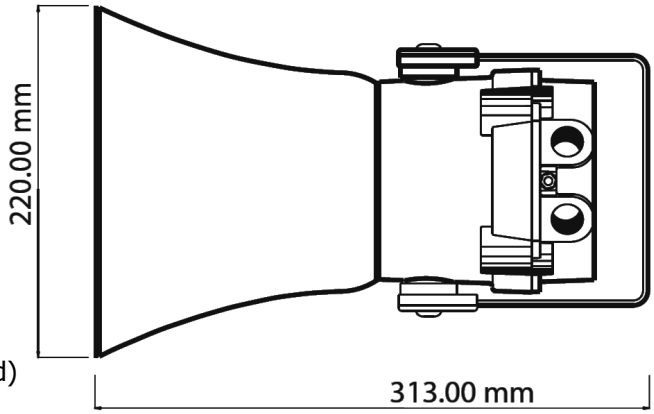

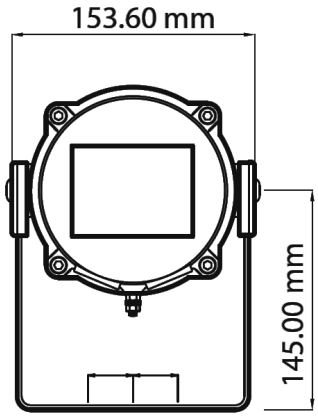

3 x 7 mm dia. Mounting Holes

Voltage	Voltage Range	Current
12 Vdc	+/- 25%	850mA
24 Vdc	+/- 25%	800mA
48 Vdc	+/- 25%	420mA
115 Vac (50/60Hz)	+/- 10%	180mA
230 Vac (50/60Hz)	+/- 10%	90mA

Also available BExDS120E Exde (increased safety) Hazardous Area Sounder.

© 2012 LGM Products Ltd. (v11.4)
LGM Products Ltd, Unit 15 Riverside Industrial Park, Farnham, Surrey, GU9 7UG, United Kingdom.
Tel: +44(0)1252 725257 Fax: +44(0)1252 727627 Email: sales@Lgmproducts.com Web: www.Lgmproducts.com

BExDS120D
Alarm sounder

Approvals:

ATEX:

KEMA 99ATEX6312 to EN60079-0, EN60079-1, EN60079-7, EN61241-0, EN61241-1

Ex II 2G Ex d IIB T4 (T_{amb} -50°C to +70°C)
Ex II 2G Ex d IIC T4 (T_{amb} -50°C to +55°C)
Ex II 2D Ex tD A21 IP67 T115 (T_{amb} -50°C to +70°C)
Ex II 2D Ex tD A21 IP67 T100 (T_{amb} -50°C to +55°C)

IECEx:

IECEx KEM 10.0003 to IEC 60079-0, IEC 60079-1, IEC 60079-7, IEC 61241-0, IEC 61241-1

Ex d IIB T4 (T_{amb} -50°C to +70°C)
Ex d IIC T4 (T_{amb} -50°C to +55°C)
Ex tD A21 IP67 T115 (T_{amb} -50°C to +70°C)
Ex tD A21 IP67 T100 (T_{amb} -50°C to +55°C)

GOST-R:

POCC GB.JB05.B02205

1ExdIICT4 Ta. -50° to +55°C
DIP A21 Ta T4

VdS:

G206011

CPD:

0786-CPD-20225

Safety-integrity suitability:

SIL1

Inmetro:

10-IEx-0009

© 2012 LGM Products Ltd. (v11.4)
LGM Products Ltd, Unit 15 Riverside Industrial Park, Farnham, Surrey, GU9 7UG, United Kingdom.
Tel: +44(0)1252 725257 Fax: +44(0)1252 727627 Email: sales@Lgmproducts.com Web: www.Lgmproducts.com