L G M PRODUCTS

FX15

Explosion Proof Visual Signal

HAZARDOUS

AUDIO VISUAL

- Corrosion resistant light weight GRP enclosure
- Stainless steel fixings and guard
- IP66/67
- Extreme temperature range
- Flexible mounting options

© 2013 LGM Products Ltd. (v1)
LGM Products Ltd, Unit 15 Riverside Industrial Park, Farnham, Surrey, GU9 7UG, United Kingdom.
Tel: +44(0)1252 725257 Fax: +44(0)1252 727627 Email: sales@Lgmproducts.com Web: www.Lgmproducts.com

L G M PRODUCTS

FX15

Explosion Proof Visual Signal

HAZARDOUS

AUDIO VISUAL

Model	FX15
IP rating	IP66/67
Zones	1, 2, 21, 22
Gas group	IIC
Light source	Xenon flash tube
Light output	5 J
Effective candela	49 (clear lens)
Flash rate	1 per second
Available supply voltages	24Vdc, 48Vdc, 115Vac, 230Vac
Operating temperature	24 & 48Vdc: -48°c to 70°c 115Vac: -55 to +55°c 230Vac: -55 to +55°c
Cable entries	3 x M20
Available lens colours	Red, amber, clear, blue, green, yellow, magenta, opal
Enclosure material	GRP
Lens material	Polycarbonate
Wire guard material	Stainless steel
Unit weight	2.4kg
Certification	ATEX, IECEx
Also available	Telephone initiate, duty label, tag label, local approval Stainless steel L-bracket stainless steel backstrap mounting bracket, Compound barrier cable glands (Ex c and Ex e) PCB assembly (any listed voltage) PCB termination Flange assembly

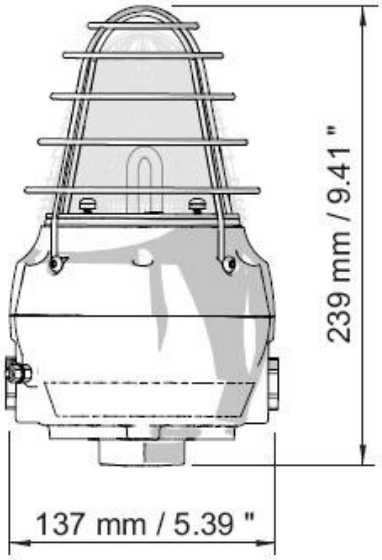

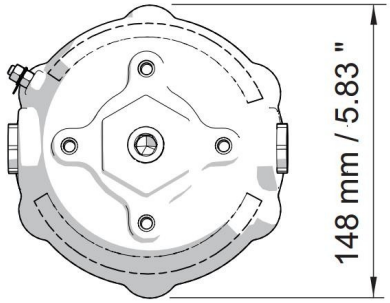

© 2013 LGM Products Ltd. (v1)
LGM Products Ltd, Unit 15 Riverside Industrial Park, Farnham, Surrey, GU9 7UG, United Kingdom.
Tel: +44(0)1252 725257 Fax: +44(0)1252 727627 Email: sales@Lgmproducts.com Web: www.Lgmproducts.com

Mounting Options

L-bracket

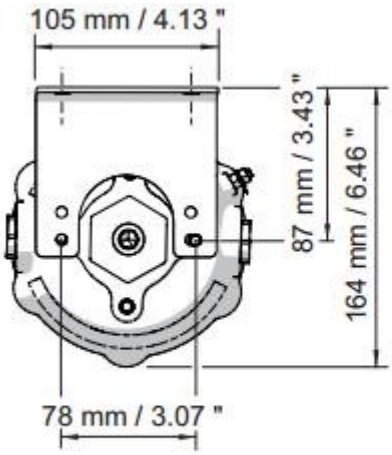

backstrap mounting bracket

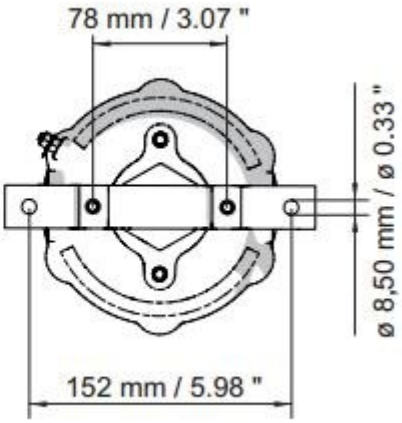

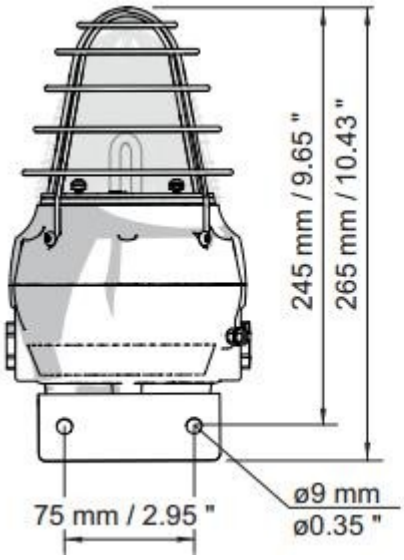

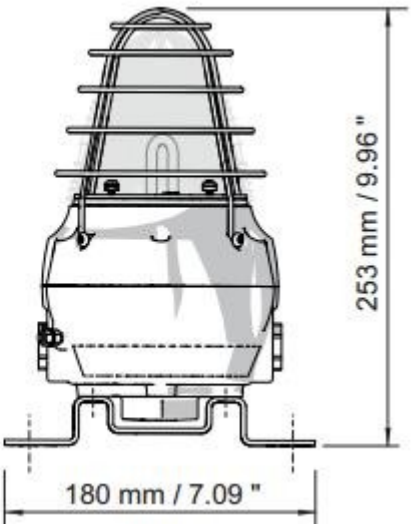

© 2013 LGM Products Ltd. (v1)
LGM Products Ltd, Unit 15 Riverside Industrial Park, Farnham, Surrey, GU9 7UG, United Kingdom.
Tel: +44(0)1252 725257 Fax: +44(0)1252 727627 Email: sales@Lgmproducts.com Web: www.Lgmproducts.com