GNExCP6B-PB

Push Button Manual Call Point

- Suitable for use in Zone 1, 2, 21 & 22 hazardous areas
- Multiple housing colours available
- Single or double pole c/o switch
- Metalized polyester or stainless steel “Duty” label
- DIN rail mounted terminal blocks: 8 x 2.5mm²
- Series and/or End of Line resistors, diodes & Zener diodes
- Optional indicator LED

© 2013 LGM Products Ltd. (v1)
LGM Products Ltd, Unit 15 Riverside Industrial Park, Farnham, Surrey, GU9 7UG, United Kingdom.
Tel: +44(0)1252 725257 Fax: +44(0)1252 727627 Email: sales@Lgmproducts.com Web: www.Lgmproducts.com

L G M PRODUCTS

GNExCP6B-PB
Push Button Manual Call Point

HAZARDOUS

Model	GNExCP6B—PB
Category	II 2G Ex e d mb IIC T4 Gb, II 2D Ex t IIIC T80°c Db
Ingress protection	IP66
Operating temperature	-40°c - +55°c
Switch contacts	Single or double pole c/o switch
Terminals	6 x 4.0mm² or DIN rail 8 x 2.55mm²
Cable entries	2 x M20 clearance top, 1 x M20 clearance side Back box can be rotated 180° to give 2 x bottom and 1 x side entries.
Stopping plugs	Ex e Nylon plugs as standard. Brass or Stainless Steel available
Housing material	GRP - Glass Reinforced Polyester (UV stable)
Colours	RAL3000 Red, blue, green, yellow, red/white, yellow/black, black
Duty label	Metalized polyester or stainless steel
Approvals/Certification	CE, ATEX, IECEx

The GNexCP6B call point can contain a maximum of two resistor or diode E.O.L. or series modules. The optional LED indicator can be combined with an EOL resistor or diode.

Resistor	Nominal Voltage	Maximum Voltage	Min Series Value	Max. Current Resistor
	48v	56v	1K8	0.75A
	24v	28v	470R	1.00A
	12v	15v	120R	1.00A
	6v	9v	47R	1.00A

Zener Diodes	Zener Voltage	Maximum Input Voltage	Maximum Current
	3.3v	56Vdc	230mA
	4.7v	56Vdc	162mA
	5.1v	56Vdc	149mA
	5.6v	56Vdc	136mA
	6.2v	56Vdc	122mA
	6.8v	56Vdc	112mA
	10v	56Vdc	76mA
	12v	56Vdc	63mA

Diodes	Maximum Voltage	Maximum Current
	<56Vdc	0.75A
	<56Vdc	1.00A

© 2013 LGM Products Ltd. (v1)
LGM Products Ltd, Unit 15 Riverside Industrial Park, Farnham, Surrey, GU9 7UG, United Kingdom.
Tel: +44(0)1252 725257 Fax: +44(0)1252 727627 Email: sales@Lgmproducts.com Web: www.Lgmproducts.com

L G M PRODUCTS

GNExCP6B-PB
Push Button Manual Call Point

HAZARDOUS

Resistor and diode configurations, specify required arrangement when ordering

Ex d certified Microswitch.

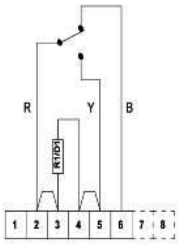

Single microswitch with (R1) EOL Resistor or (D1) EOL Diode Circuit shown with Glass Intact.

Ex d certified microswitch.

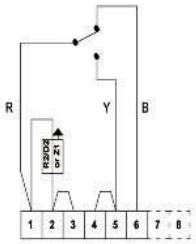

Single microswitch with (R2) Series Resistor, (D2) Series Diode or (Z1) Zener Diode Circuit shown with Glass Intact.

Ex d certified microswitch.

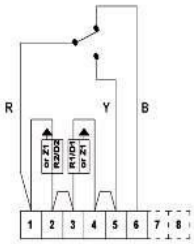

Single microswitch (R2) Series and (R1) EOL Resistors or (D2) Series and (D1) EOL Diode or (Z1) Zener Diode Circuit shown with Glass Intact.

Ex d certified microswitch.

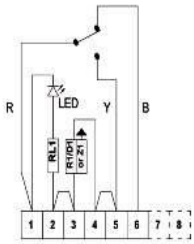

Single microswitch LED Indicator module and optional EOL Resistor / Diode (R1 or D1) Circuit shown with Glass Intact.

Ex d certified microswitches.

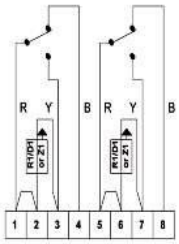

Double microswitch shown with optional EOL Resistors / Diode (R1 or D1) / (Z1) Zener Diode Circuit shown with Glass Intact.

Note:
If resistors or diodes are not required, use model GNExCP6A-PB, data sheet available at www.Lgmproducts.com

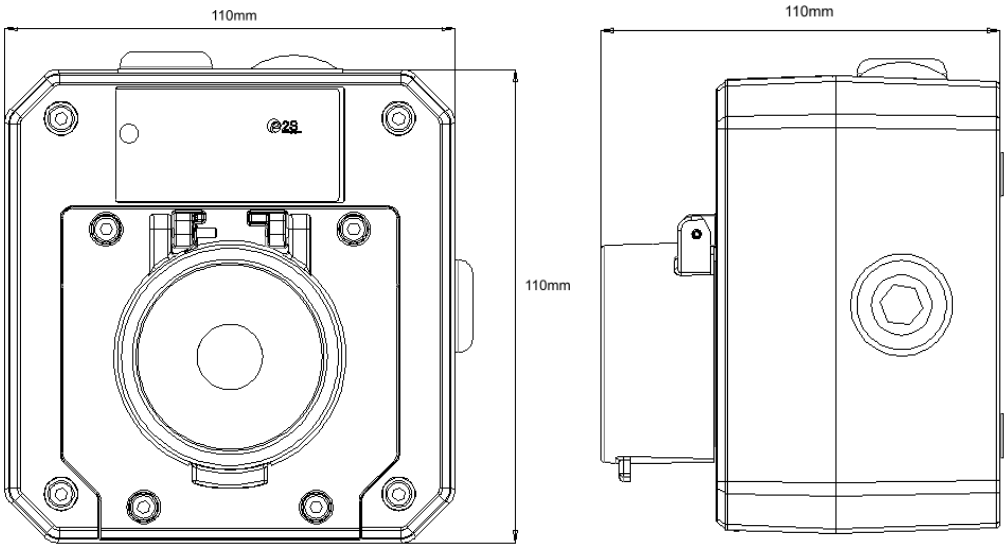

Break Glass and Tool Reset call points are also available in this range

© 2013 LGM Products Ltd. (v1)
LGM Products Ltd, Unit 15 Riverside Industrial Park, Farnham, Surrey, GU9 7UG, United Kingdom.
Tel: +44(0)1252 725257 Fax: +44(0)1252 727627 Email: sales@Lgmproducts.com Web: www.Lgmproducts.com