HMA121
Electronic Siren

- Output: 124dB(A)
- 5 Tone, 3 Stages
- IP Rating: 66
- Available Voltages: 24Vdc
  115Vac 230Vac

© 2011 LGM Products Ltd. (v11.4)
LGM Products Ltd, Unit 15 Riverside Industrial Park, Farnham, Surrey, GU9 7UG, United Kingdom.
Tel: +44(0)1252 725257 Fax: +44(0)1252 727627 Email: sales@Lgmproducts.com Web: www.Lgmproducts.com

L G M PRODUCTS

HMA121
Electronic Siren

MARINE AUDIO VISUAL

Sound output	124dB
IP rating	66 & 67 (third party tested)
Alarm tones	5
Alarm stages	3
Volume control	available
Cable entry	2 x M20
Terminal capacity	0.5 to 4.0mm² cables
Max. RH	90% at 20°C
Operating temp.	-25°C to +55°C
Storage temp.	-40°C to +70°C
Body material	Flame Retardant ABS
Colour options	Grey
Unit weight	2.5Kg (DC) 3.0Kg (AC)

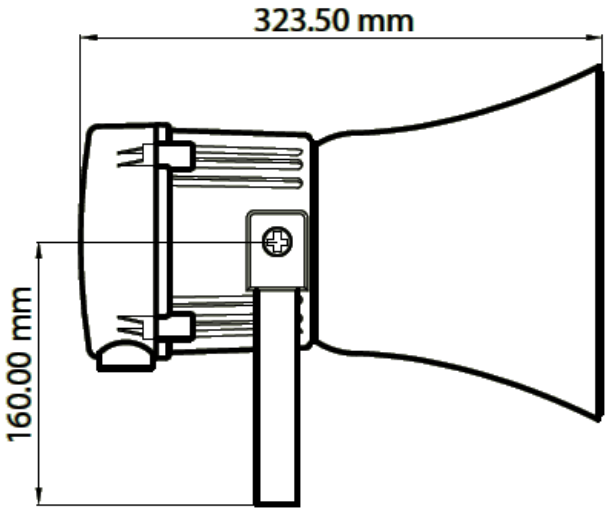

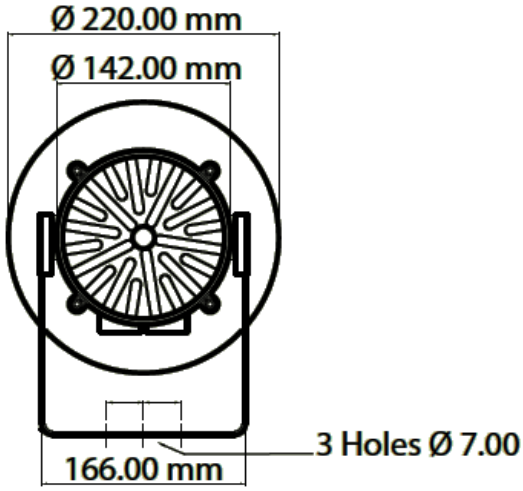

Approvals:
GOST-R approved. Cert: POCC GB-JB05-B02225

HMA121 Sound Output

Tone No.	Sound Description	dB @ 1m
1	Industrial Hooter	114dB
2	High Frequency Mechanical Siren	120dB
3	Medium Frequency Mechanical Siren	124dB
4	Electro Mechanical Buzzer	120dB
5	Mechanical Bell	116dB

Voltage options	Voltage tolerance	Current
24 Vdc	10 to 30 Vdc	375mA
115 Vac	+/- 10%	160mA
230 Vac	+/- 10%	75mA

© 2011 LGM Products Ltd. (v11.4)
LGM Products Ltd, Unit 15 Riverside Industrial Park, Farnham, Surrey, GU9 7UG, United Kingdom.
Tel: +44(0)1252 725257 Fax: +44(0)1252 727627 Email: sales@Lgmproducts.com Web: www.Lgmproducts.com