Technical Data

Specification

Operating Voltage Range	9-28Vdc
Operating Current	5-36mA
Current Consumption Nom	See tones table overleaf
Operating Temperature	-25°C to +70°C
Monitoring Method	Reverse Polarity
Second Tone	Connect third wire to -ve
Internal Fuse	N/A
Case Material	ABS
Environment Category	Type A/B
Ingress Protection	IP65*

***Manufacturer's declaration**

Askari Panel

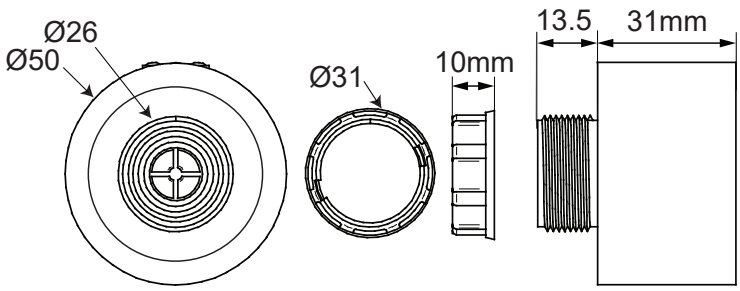

Askari Flange

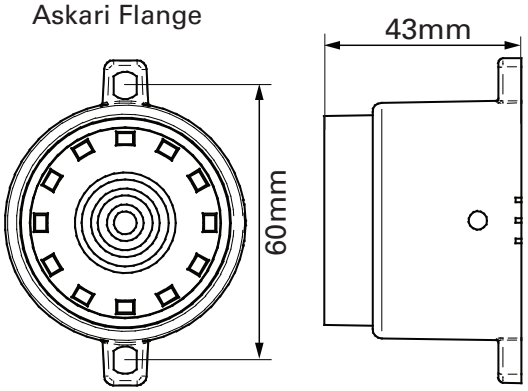

1=Closed
0=Open

Max
Volume Control

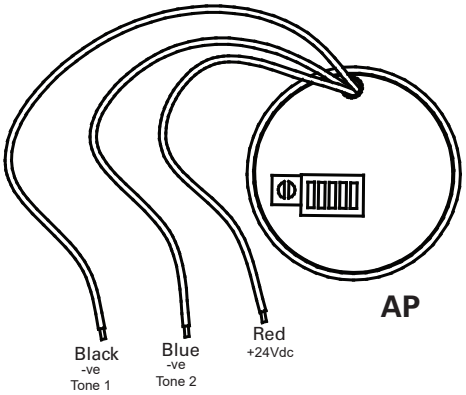

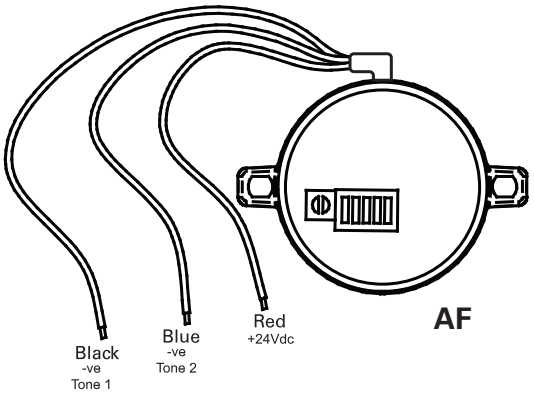

1=Closed
0=Open
Volume

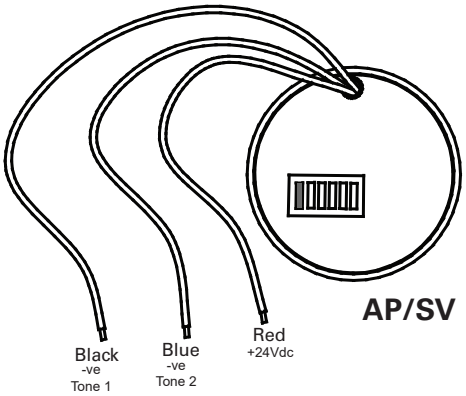

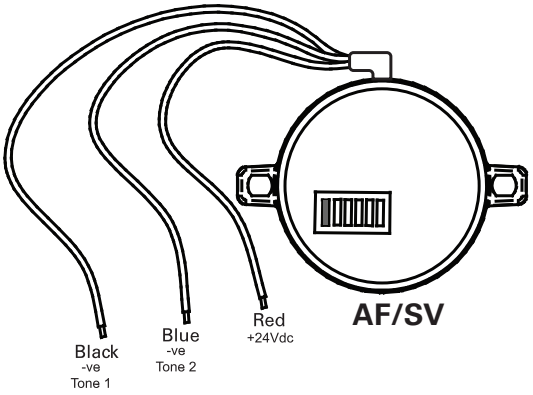

EATON
Powering Business Worldwide

Tones table

((1))	((2))	1 2 3 4 5	Pattern	Frequency Hz	Rate		Main Application	Askari Panel mA	Askari Panel dB(A)	Askari Flange mA	Askari Flange dB(A)
1	14	11111	Alternating	800 & 970	2Hz (250ms-250ms)		BS Fire tone	12	93	12	93
2	14	11110	Sweep	800 to 970	7Hz (7/s)		BS Fire tone	14	97	12	92
3	14	11101	Sweep	800 to 970	1Hz (1/s)		BS Fire tone	12	97	12	94
4	14	11100	Continuous	2850	Steady		General Purpose	31	98	32	95
5	4	11011	Sweep	2400 to 2850	7Hz		General Purpose	36	94	40	100
6	4	11010	Sweep	2400 to 2850	1Hz		General Purpose	35	104	41	102
7	14	11001	Slow whoop	500 to 1200	3s sweep, 0.5 s silence, then repeat		Dutch fire (NEN 2575)	12	106	14	95
8	14	11000	Sweep (DIN)	1200 to 500	1Hz		German fire (DIN 33 404)	15	99	15	94
9	4	10111	Alternating	2400 & 2850	2Hz (250ms-250ms)		General Purpose	29	98	33	97
10	14	10110	Intermittent	970	0.5Hz (1s On/1s Off)		PFEER alert	10	99	12	92
11	14	10101	Alternating	800 & 970	1Hz (500ms-500ms)		BS Fire	12	93	12	92
12	4	10100	Intermittent	2850	0.5Hz (1s On/1s Off)		General Purpose	20	94	28	94
13	14	10011	Intermittent	970	0.8Hz (250ms On/1s Off)		General Purpose	6	92	6	92
14	1	10010	Continuous	970	Steady		PFEER toxic gas	14	93	12	92
15	14	10001	Alternating	554 & 440	100ms-400ms		French fire (NFS 32-001)	17	98	15	94
16	19	10000	Intermittent	660	3.3Hz (150ms On/150msOff)		Swedish (Air Raid)	8	95	7	92
17	19	01111	Intermittent	660	0.28Hz(1.8s On/1.8s Off)		Swedish (Local warning)	8	96	9	93
18	19	01110	Intermittent	660	0.05Hz (13s Off / 6.5s On)		Swedish (Pre-mess)	12	96	10	93
19	1	01101	Continuous	660	Steady		Swedish (All clear)	12	96	10	93
20	19	01100	Alternating	554 & 440	0.5Hz (1s On/1s Off)		Swedish (Turn out)	16	98	15	94
21	14	01011	Intermittent	660	1Hz (500ms-500ms)		Swedish general purpose	8	96	9	93
22	14	01010	Intermittent	2850	4Hz (150ms On/100ms Off)		Pelican crossing	20	93	18	94
23	14	01001	Sweep	800 to 970	50Hz		BS Fire tone	13	96	12	92
24	4	01000	Sweep	2400 to 2850	50Hz		General Purpose	36	104	41	99
25	14	00111	Intermittent	970	3 x 500ms pulses, 1.5s silence, then repeat		ISO 8201	9	93	9	92
26	14	00110	Intermittent	800 to 970	3 x 500ms pulsed sweep, 1.5s silence, then repeat		ISO 8201	7	98	8	93
27	14	00101	Intermittent	970 & 800	3 x 500ms pulsed sweep, 1.5s silence, then repeat		ISO 8201	8	92	8	92
28	10	00100	Alternating	800 & 970	2Hz (250ms-250ms)		BS Fire tone	12	93	11	92
29	988Hz	00011	Alternating	990 & 650	2Hz (250ms-250ms) (Symphoni tones)		BS Fire tone	22	97	16	96
30	510Hz	00010	Alternating	510 & 610	2Hz (250ms-250ms) (Squashni Micro tones)		BS Fire tone	16	96	15	93
31	14	00001	Sweep	300 to 1200	1Hz		General Purpose	23	99	20	94
32	510Hz	00000	Alternating	510 & 610	1Hz (500mS-500mS)		BS Fire tone	17	96	16	94

*Although the device is functionally IP65 compliant, excessive contamination and / or fluid build-up between the sounding element and the plastic enclosure may result in a reduction of performance. Depending on environment routine inspection / maintenance of the device may be recommended accordingly. It is also advised that after any cleaning process excessive water is removed from between the sounding element and the plastic enclosure e.g. by use of a clean air aerosol. Switches & terminal block are located on the rear surfaces. The AP must be mounted through the surface of a suitable IP 65 housing. The AF rear surface must be protected from water / dust ingress. The supply cable and tube must be protected from water and dust ingress.

Powering Business Worldwide

Eaton Electrical Products Ltd.
Llantarnam Park
Cwmbran
NP44 3AW
Tel: +44 (0) 1633 628500
Fax: +44 (0) 1633 866346

Eaton
EMEA Headquarters
Route de la Longeraie 7
1110 Morges, Switzerland
Eaton.eu
TEL: +44 (0) 1302 321541
FAX: +44 (0) 1302 303220
Firesales@eaton.com
Firetechsupport@eaton.com

© 2021 Eaton
All Rights Reserved
Eaton is a registered trademark.

All trademarks are property
of their respective owners.
www.eaton.com