LGM PRODUCTS
+44 1252 725257
sales@lgmproducts.com

# XP95 IS Heat

## Addressable Detector

Datasheet Version 1.3

Point type heat detector with LED indicator

IP rating: IP53

14 to 22Vdc

Unaffected by wind and atmospheric pressure

**Fire detection**

**Hazardous area**

Tel: +44(0)1252 725257 Fax: +44(0)1252 727627
© 2018/19 LGM Products Ltd.
Email: sales@lgmproducts.com Web: www.lgmproducts.com
ISO 9001:2015 certified
Address: LGM Products Ltd, Unit 15 Riverside Industrial Park, Farnham, Surrey, GU9 7UG, United Kingdom.

LGM PRODUCTS
+44 1252 725257
sales@lgmproducts.com

# XP95 IS Heat

## Addressable Detector

Datasheet Version 1.3

| | |
|---|---|
| **Model no.** | 55000-440APO |
| **Sensor** | Single NTC thermistor |
| **System** | Addressable |
| **Remote indication** | Red LED |
| **IP rating** | IP53 |
| **Supply voltage** | 14-22Vdc |
| **Quiescent current** | 300µA |
| **Cable entry** | From rear |
| **Unit weight** | 105g |
| **Operating temp.** | -20°C to +60°C |
| **Storage temp.** | -30°C to +80°C |
| **Min humidity** | 0% RH |
| **Max humidity** | 95% RH |
| **Dimensions** | 100 x 42mm (without base) |
| **Body material** | Polycarbonate |
| **Unit colour** | White |
| **Approvals** | EN54, MED, LR, BV, ABS, CCS, KRS, Vds, CCCf, BOSEC, VNIIPO, SBSC, EAC, PESO, ATEX, IECEX |

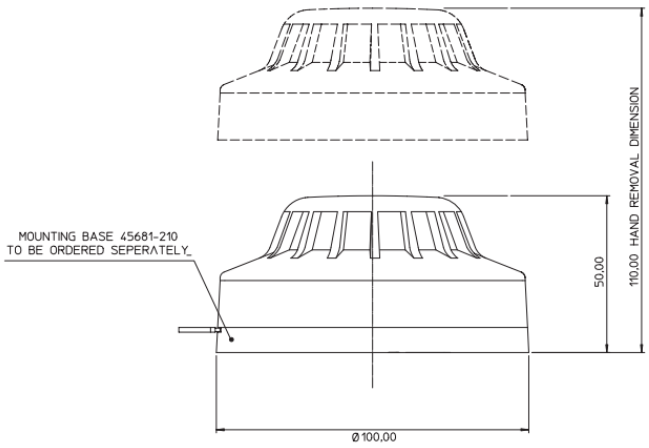


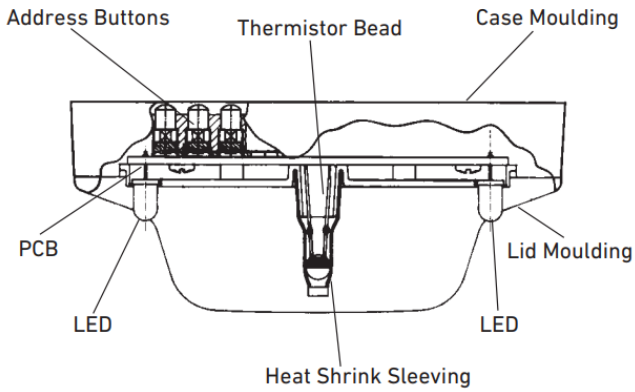


**Bases not included**

**See XP95 Bases datasheet**


© 2018/19 LGM Products Ltd.